7. Radiator

A: REMOVAL

CAUTION:
The radiator is pressurized. Wait until engine cools down before working on the radiator.

1) Set the vehicle on a lift.
2) Disconnect the ground cable from the battery.

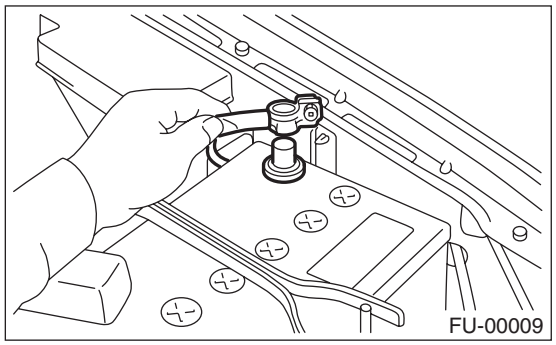

3) Lift up the vehicle.
4) Remove the under cover.
5) Drain engine coolant completely.
<Ref. to CO(H4SO)-16, DRAINING OF ENGINE COOLANT, REPLACEMENT, Engine Coolant.>
6) Disconnect the connectors of radiator main fan (A) and sub fan motor (B).

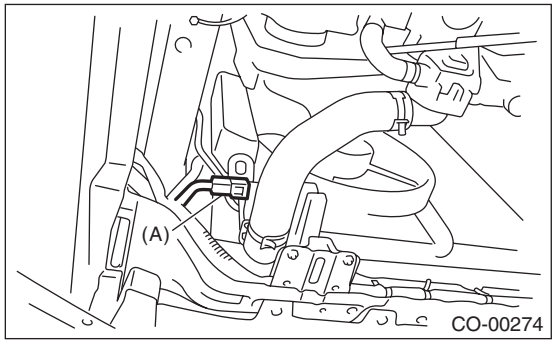

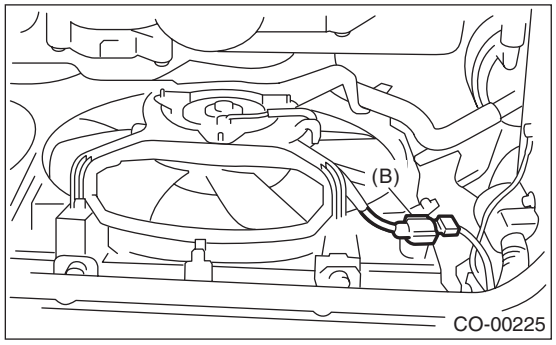

7) Disconnect the radiator outlet hose from thermostat cover.

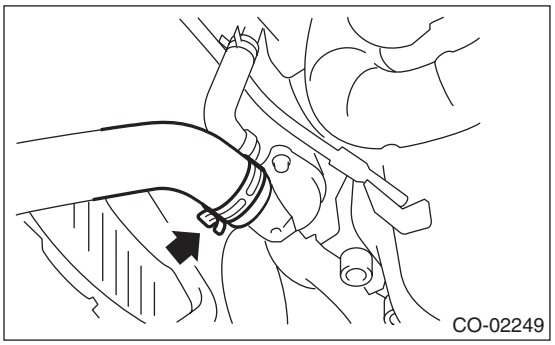

8) Disconnect the ATF cooler hoses from ATF pipes. (AT model) Apply the cap to prevent ATF leaks.

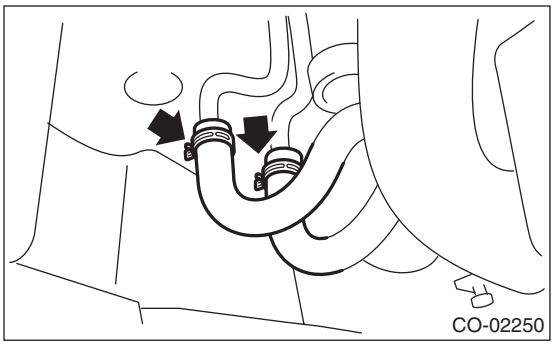

9) Lower the vehicle.
10) Disconnect the over flow hose.
11) Remove the reservoir tank. <Ref. to CO(H4SO)-31, REMOVAL, Reservoir Tank.>
12) Remove the air intake duct.
13) Disconnect the radiator inlet hoses from the engine.

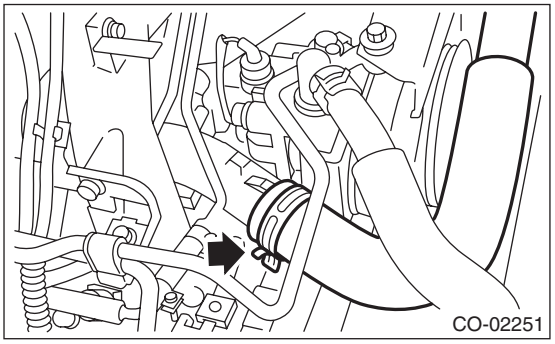

14) Remove the radiator upper brackets.

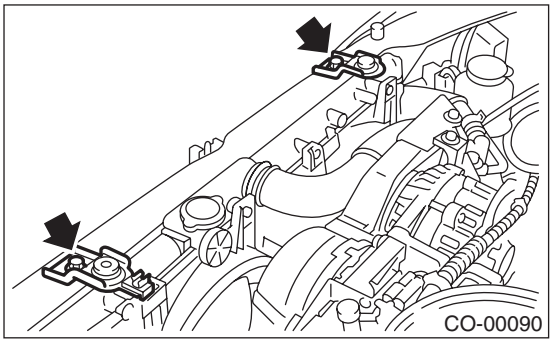

15) Detach the power steering hose from the clip on the radiator.

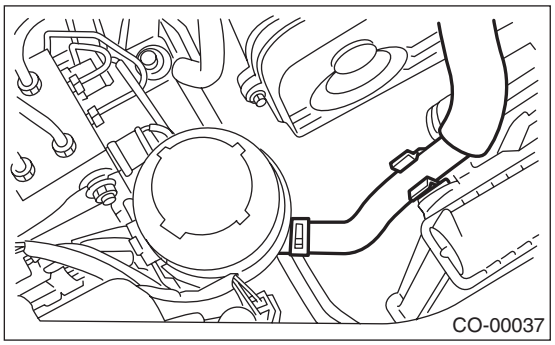

16) Lift the radiator up and away from vehicle.

B: INSTALLATION

1) Attach the radiator lower cushion to the hole on the radiator lower bracket.

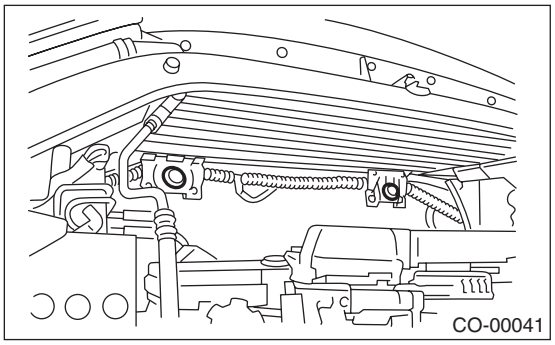

2) Install the radiator to vehicle.

NOTE:
Make pins on the lower side of radiator be fitted into the radiator lower cushions on body side.

3) Install the radiator upper brackets and tighten the bolts.

Tightening torque:
18 N·m (1.8 kgf-m, 13.0 ft-lb)

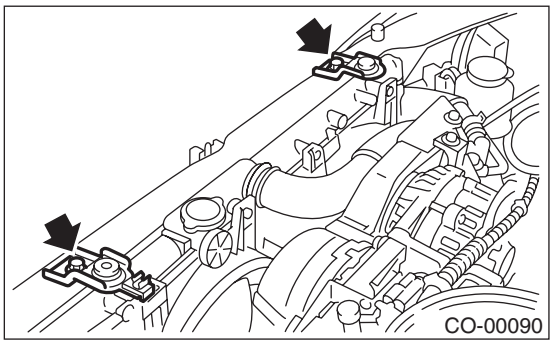

4) Attach the power steering hose to the radiator.

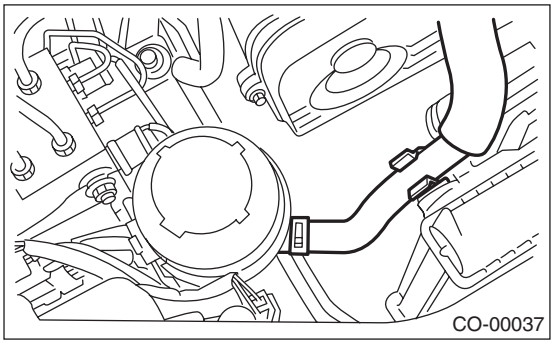

5) Connect the radiator inlet hose.

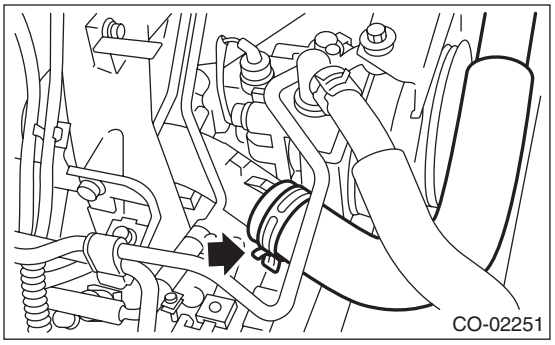

6) Install the air intake duct.
7) Install the reservoir tank. <Ref. to CO(H4SO)-31, INSTALLATION, Reservoir Tank.>
8) Connect the over flow hose.
9) Lift up the vehicle.
10) Connect the ATF cooler hoses. (AT model)

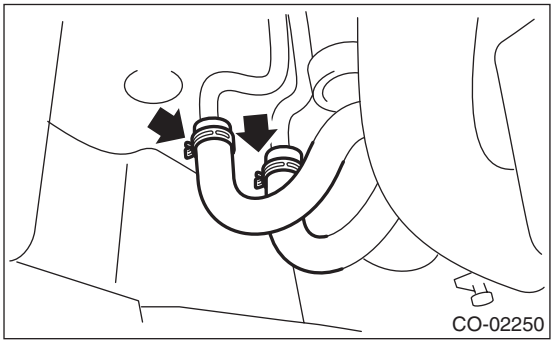

11) Connect the radiator outlet hose.

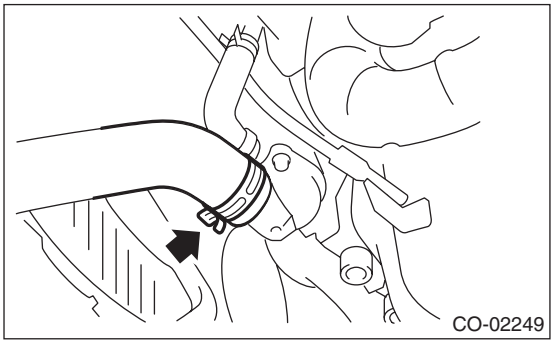

12) Connect the connectors to the radiator main fan motor (A) and sub fan motor (B).

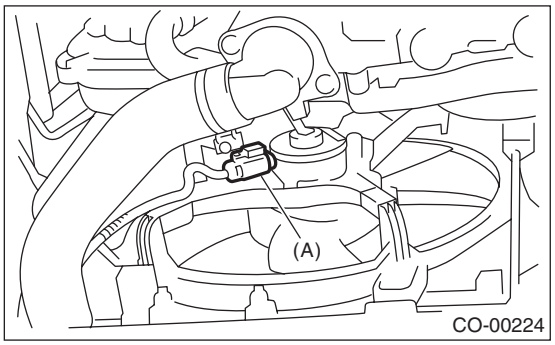

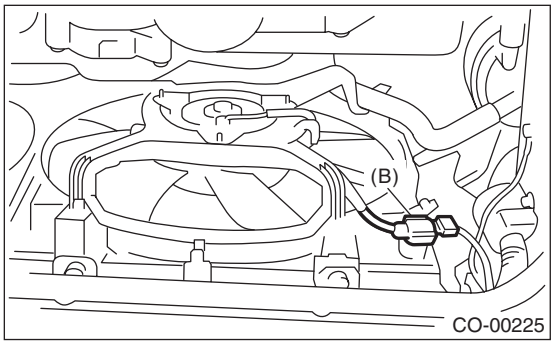

13) Install the under cover.
14) Lower the vehicle.
15) Connect the ground cable to the battery.

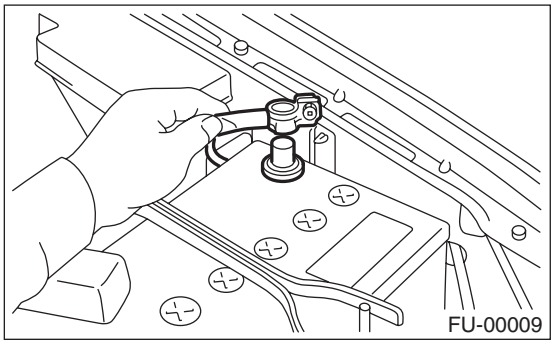

16) Fill engine coolant. <Ref. to CO(H4SO)-16, FILLING OF ENGINE COOLANT, REPLACEMENT, Engine Coolant.>
17) Check the ATF level. <Ref. to 4AT-28, INSPECTION, Automatic Transmission Fluid.>

C: INSPECTION

1) Remove the radiator cap, fill the radiator with engine coolant, and then install the tester to the installation position of cap.

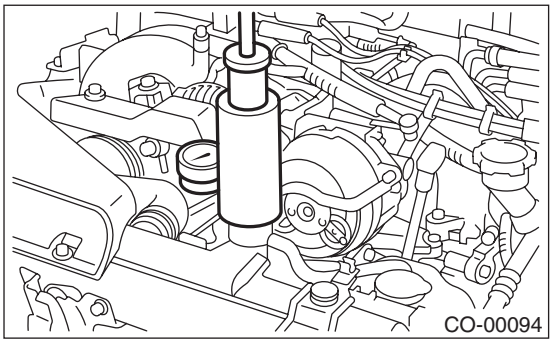

2) Apply a pressure of 157 kPa (1.6 kgf/cm^2, 23 psi) to the radiator and check the following items:
- Leakage from the radiator or its vicinity
- Leakage from the hose or its connections

CAUTION:
- **Engine should be turned off.**
- **Wipe engine coolant from check points in advance.**
- **Be careful to prevent engine coolant from spurting out when removing tester.**
- **Be careful not to deform the filler neck of radiator when installing and removing the tester.**